DW30

Wheel Dumper

Safe operation, comfortable transportation.

The DW30 provides the ideal harmonization of high safety standards and extensive equipment for many application options. Whether with a cabin or roll bar, with concrete skip or swivel tip skip: it is individually adaptable ex works, making it a real all-rounder for any construction site. It simultaneously provides a 3-ton payload at low dimensions, which means it can be efficiently applied, even in area that are more difficult to access. For the precise placement of materials in concreting works, the optional concrete skip is equipped with a pouring pan. The DW30 provides a very high level of safety equipment both as standard and across all available versions.

Highlights

- Skip monitoring
- Inclination monitoring
- Seat belt monitoring with start release
- Hydrostatic 4-wheel drive
- Concrete skip

Technical Data

Hydraulic

Operating pressure hydraulics	2,175.0 psi
Hydraulicpump	ZRP
flow rate	6.1 gal/mi

Mechanical - Output Details

Travel speed	12.4 m/H

Mechanical Details

Length	153.8 "
Width	68.1 "
Height	110.2 "
Payload	6,613.9 lb
skip	Swivel skip
skip capacity levelled	338.1 gal US
Skip capacity heaped	462.3 gal US
Skip capacity waterlevel	261.5 gal US
Pendulum angle	12.0 °
Operating weight (min.-max.)	4,515.1 - 5,524.8 lb

Engine

Cooling	Water-cooling
Engine type	Diesel engine
Cylinder	3.0
Cylinder capacity	68.1 Inch3
Inclined position max.	25.0 °
Kraftstofftyp	Diesel EN 590
Effective power	25.3 hp
Nominal Engine speed	3,000.0 1/min
Exhaust-gas limit	EU Stage V
Starter battery Voltage	12.0 V
Engine Manufacturer	Yanmar
Engine Designation	3TNV76-UDWN

Environment Data

Sound power LWA, measured	98.1 dB(A)
Sound power LWA, guaranteed	101.0 dB(A)
Sound power LWA (Standard)	ISO 6395

Operating Fluids

Fuel specification	Diesel EN 590
Fuel Tank capacity	9.2 gal US

Chassis

turning radius	156.7 "
articulation angle	36.0 °

The illustrations, equipment and data shown may deviate from the current delivery program of your country. Optional equipment subject to additional charge may be shown. Subject to changes.

Copyright © 2024 Wacker Neuson SE | www.wackerneuson.com

Traction drive	Swash plate motor
hydraulikpump	Gear pump
operating pressure	6,525.0 psi
flow rate	17.4 gal/mi

Tires	11.5/80-15,3 14PR 126 A8

Shipping and Storage

Shipping weight	4,722.3 lb

The illustrations, equipment and data shown may deviate from the current delivery program of your country. Optional equipment subject to additional charge may be shown. Subject to changes.

Copyright © 2024 Wacker Neuson SE | www.wackerneuson.com

Dimensions

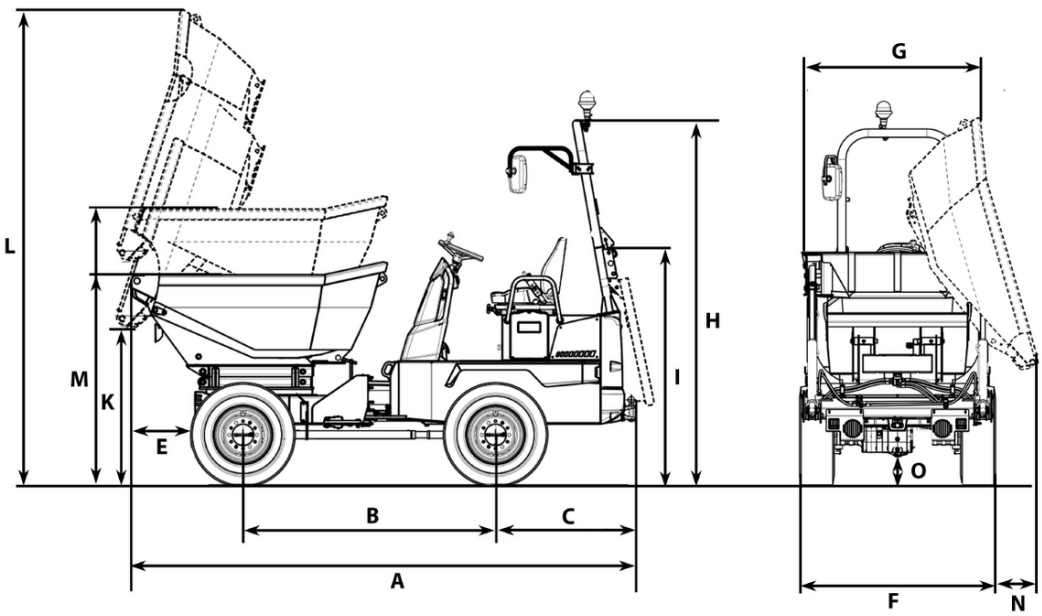

A	Total length	153.7 in
B	Wheel base	76.6 in
C	Rear overhang	40.9 in
E	Dumping width	19 in
F	Width of vehicle	68.1 in
G	Width of skip	68.1 in
H	Height ROPS	109.4 in
I	Height of ROPS tilted	75.3 in
J	Height with cab	105.1 in
K	Dumping height max.	39.1 in
L	Skip height tilted	121.3 in
M	Skip height	58.1 in
N	Dumping width lateral	9.3 in
O	Ground clearance	10.1 in

The illustrations, equipment and data shown may deviate from the current delivery program of your country. Optional equipment subject to additional charge may be shown. Subject to changes.

Copyright © 2024 Wacker Neuson SE | www.wackerneuson.com